O P JINDAL SCHOOL, SAVITRINAGAR

CLASS NOTES

CLASS XII PHYSICS TOPIC : CURRENT ELECTRICTY

Date : 29 /04/20 SUBTOPIC: POTENTIOMETER

Problem:- A resistance of R Ω draws current from a potentiometer. The potentiometer has a total resistance R_0 Ω(Fig.). A voltage V is supplied to the potentiometer. Derive an expression for the voltage across R when the sliding contact is in the middle of the potentiometer.

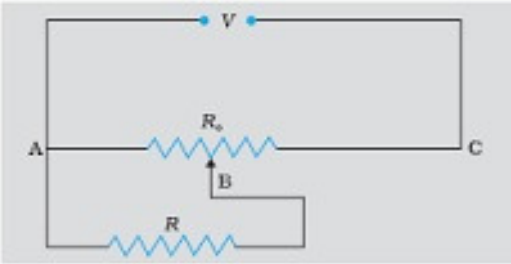

Answer: - While the slide is in the middle of the potentiometer only half of its resistance ($R_0/2$) will be between the points A and B. Hence, the total resistance between A and B, say, R_1, will be given by the following expression:

$(1/R_1)= (1/R) + (1/R_0/2)$

$R_1 =(R_0R)/ (R_0+2R)$

The total resistance between A and C will be sum of resistance between A and B and B and C, i.e., $(R_1 + R_0/2)$

∴The current flowing through the potentiometer will be

$I= (V)/(R_1 + R_0/2)$

The voltage V_1 taken from the potentiometer will be the product of current I and resistance R_1,

$V_1 = I R_1 = (2V)/ (2R_1R_0) \times R_1$

Substituting for R_1, we have a

$V_1= (2V)/ ((2(R_0xR)/ (R_0+2R)) +R_0) \times ((R_0xR)/ (R_0+2R))$

$V_1= (2VR)/ (2R+R_0+2R)$

Or $V_1= (2VR)/ (R_0+4R)$

Problem:- In a potentiometer arrangement, a cell of Emf 1.25V gives a balance point at 35.0 cm length of the wire. If a cell is replaced by another cell and the balance point shifts to 63.0 cm, what is the Emf of the second cell?

Answer:- Emf of the cell, E_1=1.25V

Balance point of the potentiometer, l_1=35cm

The cell is replaced by another cell of Emf E_2.

New balance point of the potentiometer, l_2=63cm

The balance condition id given by the relation,

$(E_1/E_2) = (l_1/l_2)$

$E_2 =E_1 \times (l_2/l_1)$

=1.25x(63/35)

=2.25V.

Therefore, Emf of the second cell is 2.25 V.

Problem:- Figure shows a potentiometer circuit for comparison of two resistances. The balance point with a standard resistor R = 10.0 is found to be 58.3 cm, while that with the unknown resistance X is 68.5 cm. Determine the value of X. What might you do if you failed to find a balance point with the given cell of Emf?

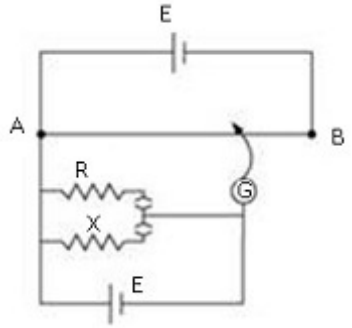

Answer:-

Resistance of the standard resistor, R = 10.0

Balance point for this resistance, l_1 = 58.3 cm
Current in the potentiometer wire = i

Hence, potential drop across R, E_1 = iR
Resistance of the unknown resistor = X

Balance point for this resistor, l_2 = 68.5 cm
Hence, potential drop across X, E_2 = iX
The relation connecting Emf and balance point is,

$(E_1/ E_2) = (l_1/ l_2)$
$(iR) / (iX) = (l_1/ l_2)$
$X= (l_1/ l_2) \times R$
$= (68.5/58.3) \times 10$

$=11.749\Omega$

Therefore, the value of the unknown resistance, X, is 11.75 Ω.

If we fail to find a balance point with the given cell of Emf, E, then the potential drop across Rand X must be reduced by putting a resistance in series with it. Only if the potential drop across Ror X is smaller than the potential drop across the potentiometer wire AB, a balance point is obtained.